RoHS Compliant

Specifications:
Material And Finish:
Insulator:PA9T UL94V-0 Color:Black
Contact:Brass
Plated:See Ordering Information

Rating:
Current Rating:2.0 Amp
Voltage Rating:150V AC/DC
Operating Temperature Range:-40°~+105°C

Electrical:
Contact resistance:20m Ohm Max
Insulator resistance:1000M ohm min.
Withstanding Voltage:500V AC/Minute

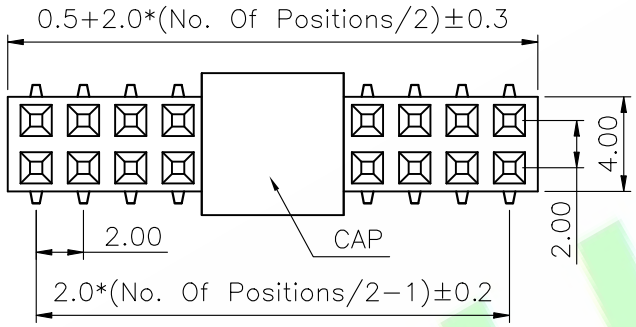

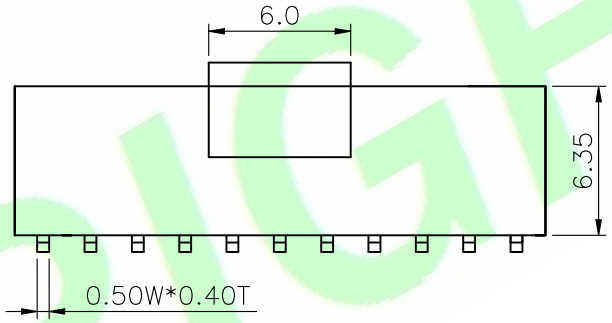

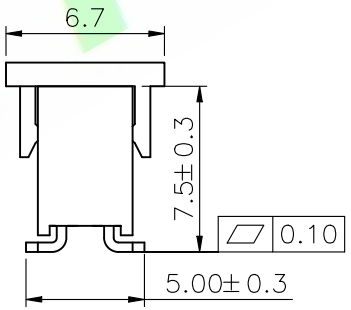

Ordering Information
S20242M-XXX63A-C0X
1 2 3 4 5

1: —— Series No.
2: —— M:SMT Type
3: —— No. of Positions
4: —— A:Gold Flash
H:Selective flash Gold
T:10U"Gold contact;Matte Tin on tail
Q:Tin Plated.
5: —— B:W/O Cap In Tube
C:In Tray
D:W/Cap In Tube
F:W/Cap In Tape&Reel

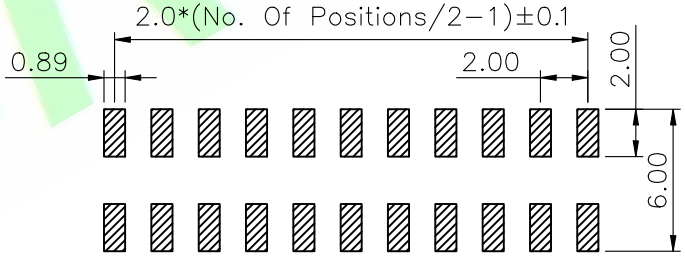

Recommended PCB Layout

REV.	DESCRIPTION	DR.BY	ECN. NO.
3X	LCP has been revised to PA9T	Judyyan	20260718
2X	Update dimensions	Judyyan	20260525
1X	ORIGINAL	Judyyan	

DR.BY.: Judyyan
CHKD.: Tony
APPD.: Billy

GENERAL TOLERANCE:			
LINEAR		ANGLES	
X.:	±0.30	X°:	±5.0°
X.X:	±0.25	X.X°:	±3.0°
X.XX:	±0.15	X.XX°:	±2.0°
X.XXX:	±0.10	X.XXX°:	±1.0°

PART NO : S20242M-XXX63A-C0X
DWG. NO.:
TITLE : 2.0mm Pitch PCB Socket Header SMT Type
DATE: 11-Mar-2025

HJBRIGHT® 東莞市華晶電子有限公司
BRIGHT-E ELECTRONIC TECHNOLOGY LIMITED

SHEET: 1/1
SCALE: 1:1
UNIT: mm
THIRD ANGLE PROJECTION
A4

HJBRIGHT®