RoHS Compliant

Specifications:
Material And Finish:
Insulator:Nylon 6T UL94V-0 Color:Black
Contact:Brass
Plated:See Ordering Information

Rating:
Current Rating:1.0 Amp
Voltage Rating:100V AC/DC
Operating Temperature Range:-40°~+105°C

Electrical:
Contact resistance:40m Ohm Max
Insulator resistance:500M ohm min.
Withstanding Voltage:500V AC/Minute

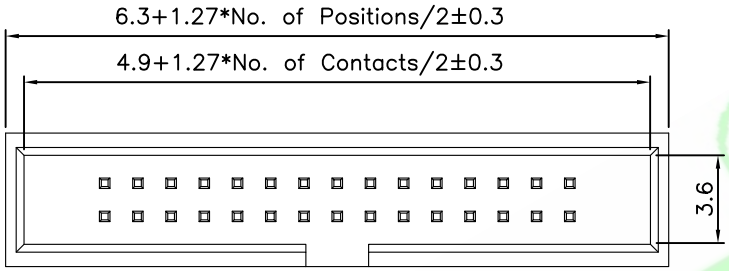

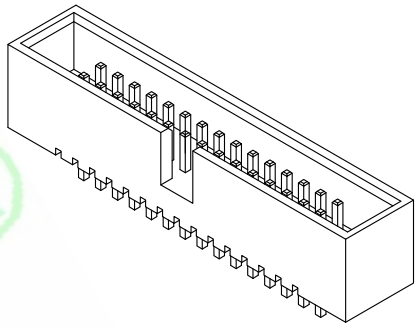

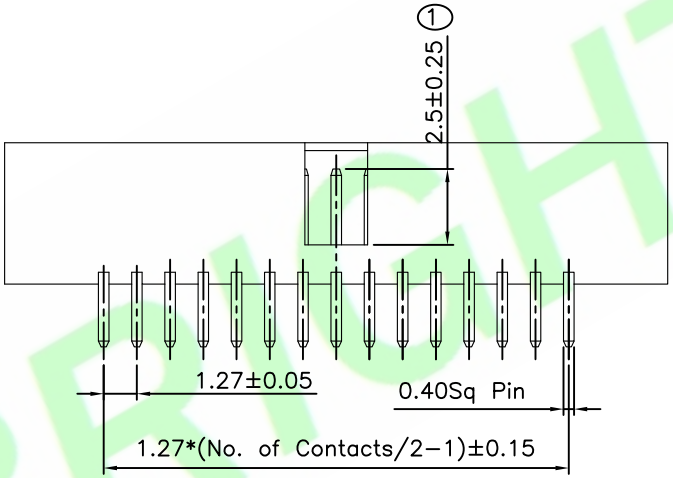

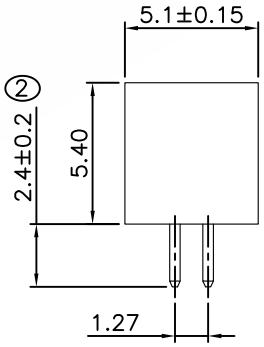

Ordering Information
B1273S-XXX-01-X
1 2 3 4 5

1: —— Series No.
2: —— S:Straight Type
3: —— No. of Positions
4: —— A:Gold Flash
H:Selective Gold Plated
Y:Selective 30u" Gold
Q:Tin Plated
5: —— A:In bag
B:In Tube

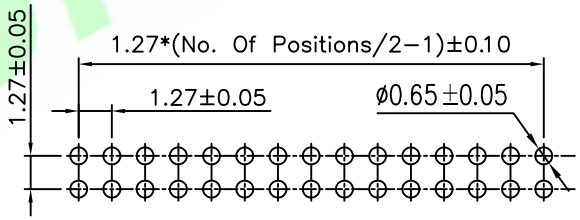

Recommended PCB Layout

HJBRIGHT®

REV.	DESCRIPTION	DR.BY	ECN. NO.
5X			
4X			
3X			
2X			
1X	ORIGINAL	Samson	

DR.BY.: Samson
CHKD.: Tony
APPD.: Billy

GENERAL TOLERANCE:			
LINEAR		ANGLES	
X.:	±0.30	X°:	±5.0°
X.X:	±0.20	X.X°:	±3.0°
X.XX:	±0.15	X.XX°:	±2.0°
X.XXX:	±0.10	X.XXX°:	±1.0°

PART NO : B1273S-XXX-01-X
DWG. NO.: RD0805-061
TITLE : 1.27mm Pitch Box Header Straight Type
DATE: 17-May-2008

HJBRIGHT 東莞市華晶電子有限公司
BRIGHT-E ELECTRONIC TECHNOLOGY LIMITED

SHEET: 1/1
SCALE: 1:1
UNIT: mm
THIRD ANGLE PROJECTION
A4