RoHS Compliant

Specifications:

Material And Finish:

Insulator:PBT+30%GF UL94V-0 Black color
Contact:Brass
Shell:Steel With Nickel Plated.
Plated:See Ordering Information

Rating:

Current Rating:5 Amp
Operating Temperature Range:-55°~+105°C

Electrical:

Contact resistance:25m Ohm Max
Insulator resistance:5000M ohm min.
Withstanding Voltage:1000V AC/Minute

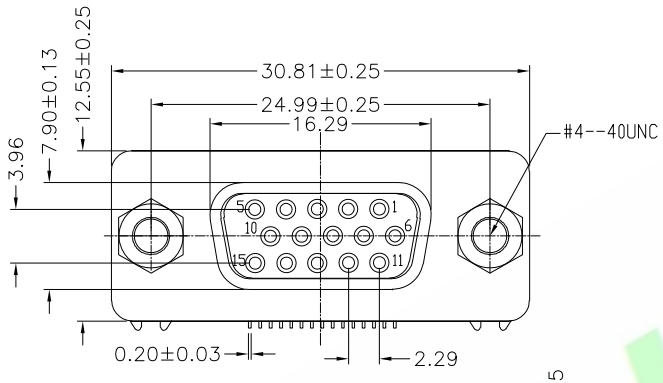

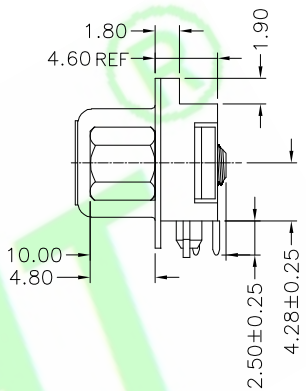

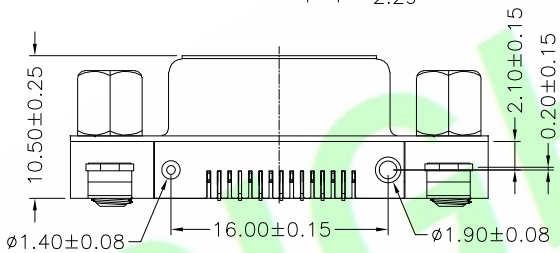

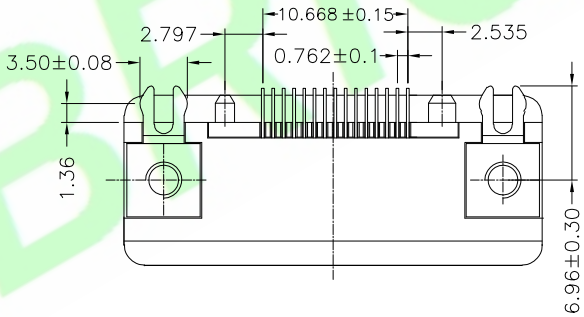

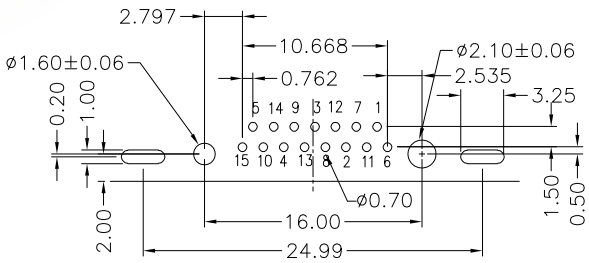

PCB LAYOUT

Ordering Information

DB173R-XXFX-XX-XH
1 2 3 4 5 6 7

1:—— Series No.
2:—— R:R/A Type
3:—— No. of Positions
4:—— F:FeMale
5:—— 5:Selective Gold Plated
A:Contact Gold flash
6:—— 01:W/O Screw
02:With Screw
7:—— A:In Bag
C:In Tray

REV.	DESCRIPTION	DR.BY	ECN. NO.
5X			
4X			
3X			
2X			
1X	ORIGINAL	Aaron	

DR.BY.: Aaron
CHKD.: Pan mingquan
APPD.: Billy

GENERAL TOLERANCE:

LINEAR		ANGLES	
X.:	±0.38	X°:	±5.0°
X.X:	±0.35	X.X°:	±3.0°
X.XX:	±0.25	X.XX°:	±2.0°
X.XXX:	±0.15	X.XXX°:	±1.0°

PART NO : DB173R-XXFX-XX-XH
DWG. NO.:
TITLE : Slim-15F铆合型前八后七 锁螺丝
DATE: 25-Mar-2020

HJBRIGHT® 東莞市華晶電子有限公司
BRIGHT-E ELECTRONIC TECHNOLOGY LIMITED

SHEET: 1/1
SCALE: 1:1
UNIT: mm
THIRD ANGLE PROJECTION
A4