RoHS Compliant

Automobile Product

Specifications:

Material And Finish:

Insulator:PBT UL94V-0 Color:Black
Contact:Brass
Plated:See Ordering Information

Rating:

Current Rating:10.0 Amp
Voltage Rating:250V AC/DC
Operating Temperature Range:-40°~+105°C

Electrical:

Contact resistance:20m Ohm Max
Insulator resistance:1000M ohm min.
Withstanding Voltage:2000V AC/Minute

Ordering Information

A4005S-08M-01-C
1 2 3 4 5

1: —— Series No.
2: —— S:Straight Type
3: —— No. of Positions
4: —— A:Gold Flash
H:Gold Flash on Contact;Matte Tin on tail
M:Matte Tin Plated
5: —— C:In Tray

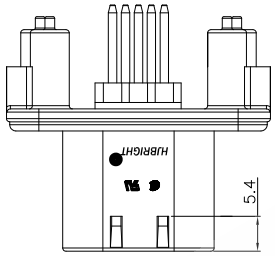

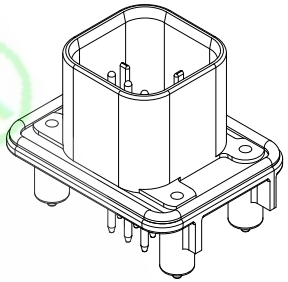

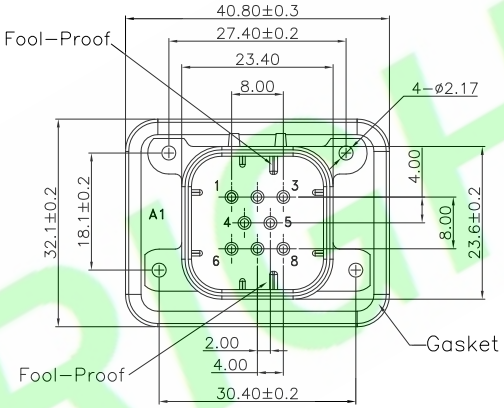

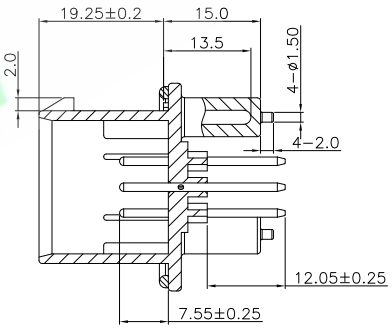

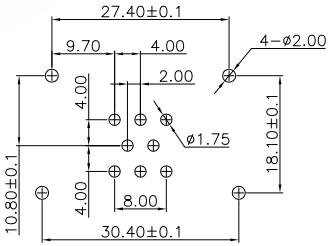

Recommended PCB Layout

HJBRIGHT®

REV.	DESCRIPTION	DR.BY	ECN. NO.
5X			
4X			
3X			
2X			
1X	ORIGINAL	Kenry	

DR.BY.: Kenry
CHKD.: Tony
APPD.: Billy

GENERAL TOLERANCE:

LINEAR		ANGLES	
X.:	±0.30	X°:	±5.0°
X.X:	±0.20	X.X°:	±3.0°
X.XX:	±0.15	X.XX°:	±2.0°
X.XXX:	±0.10	X.XXX°:	±1.0°

PART NO : A4005S-08M-01-C
DWG. NO.: 1-776276-1
TITLE : 4.00mm Pitch Header Assembly, Straight Type
DATE: 19-Jan-2015

HJBRIGHT® 東莞市華晶電子有限公司
BRIGHT-E ELECTRONIC TECHNOLOGY LIMITED

SHEET: 1/1
SCALE: 1:1
UNIT: mm
THIRD ANGLE PROJECTION
A4